JOHNSON PUMP

article number 10-24164 pump F4B-9

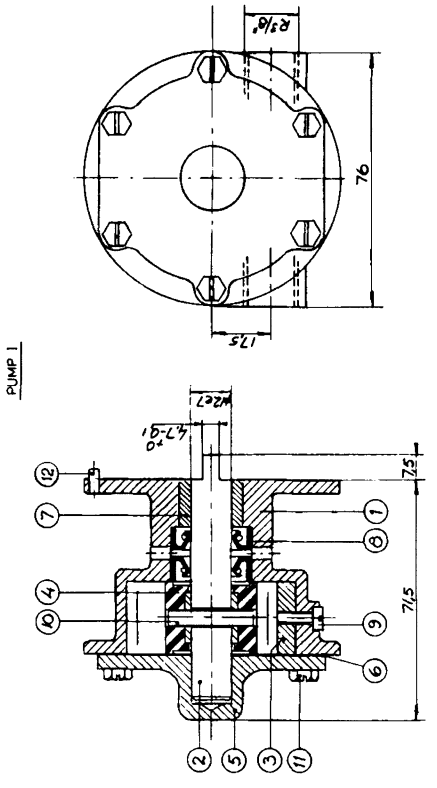

6 st skruvar 08-04-176 pos (11) och 1st packning 01-42391 samt 1st packning 01-45401 pos (13) levereras separat att avvägas för Pump II.

6 pcs screw pos (11) and 1+1 pcs gasket pos (13) will be delivered separately to be used for PumpII

13	1	Packning	Gasket	01-42391 (ev. separat)
13	1	Packning	Gasket	01-45401 (ev. separat)
12	1	Stift	Pin	01-42400
11	12	Skruv	Screw	05-04-176
10	1	Skruv	Screw	05-04-124
9	1	Skruv	Screw	05-04-115
8	2	Läppätätning	Lipseal	05-29-139
7	1	Bussning	Bushing	01-45207-3
6	2	Packning	Gasket	Set fault
5	1	Lock	Endcover	01-42386-2
4	1	Impeller	Impeller	08-810 A
3	1	Kam	Cam	01-42359
2	1	Axel	Shaft	01-45315
1	1	Pumphus	Body	01-24122-3
Part No. Del nr	Nbr. Antal	Description Benämning	Material	Dimension	Draw. No. Ritn. nr

This drawing is the property of J.P. Pumpar and is in accordance with prevailing law. Detta ritning är JP:s egendom. Skydlad enligt gällande lag.

JOHNSON PUMP AB ÖREBRO SWEDEN Tel. 019/11 95 00

Tolerance unless otherwise noted ±0,5 mm and ±1 on bend angles. Unmachined surface Obearbetad yta Bearbetad yta ±1/2 Machined surface Bearbetad yta ±1/1 ±1/2

Sharp edges broken Skarpa kanter brytes Skarpa kanter brytes Burrs not permitted Grater skälla tillåts

Radius unless otherwise specified Radie om ej annat angivet

Title Titel: Johnson Impellerpump

Type F4B-8 Cooling/Cooling

Scale Skala 1:1

Drawn Ritad PY-6-98/ RH

Sign. Sign.

Drawn. No. Ritn. nr 10-24164

PUMP NO	HANDLING PUMP I	GASKET (6)
10-24164-1	Seawater	01-42391 t=0,15
10-24164-2	Closed fresh-water system	01-45401 t=0,40

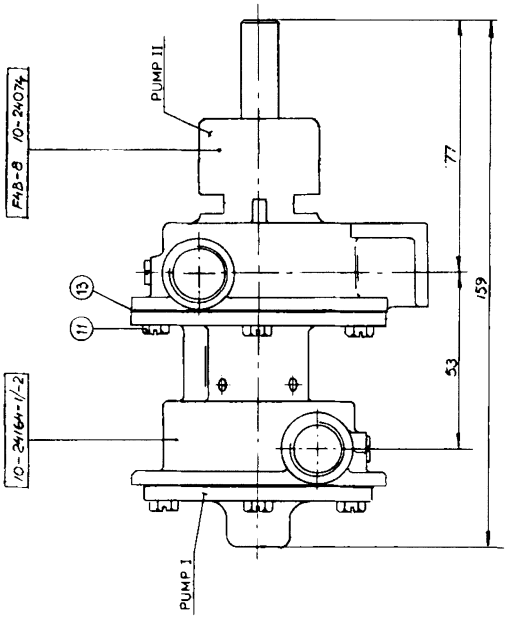

RECOMMENDATION FOR GASKET SELECTION PUMP II

HANDLING PUMP II	GASKET (13)
Seawater	01-42391 t=0,15
Closed fresh-water system	01-45401 t=0,40 Red marked

Rev. No. Ändr. nr | Revision Ändring | Date Datum | Sign.

The product, i.e. concept, design and construction, is the property of Johnson Pump AB