HAIGHT PUMPS
DIVISION OF: BAKER MANUFACTURING COMPANY

133 Enterprise Street • Evansville, WI 53536
Phone: 800-871-9250 • Fax: 608-882-3777

Z213D Bracket for Double Pump

Note: Z213D Bracket Will Accept:
*182 Frame Motors- Long Coupling Required
*254 Frame Motors- Optional SP213 Adapter Ring Required

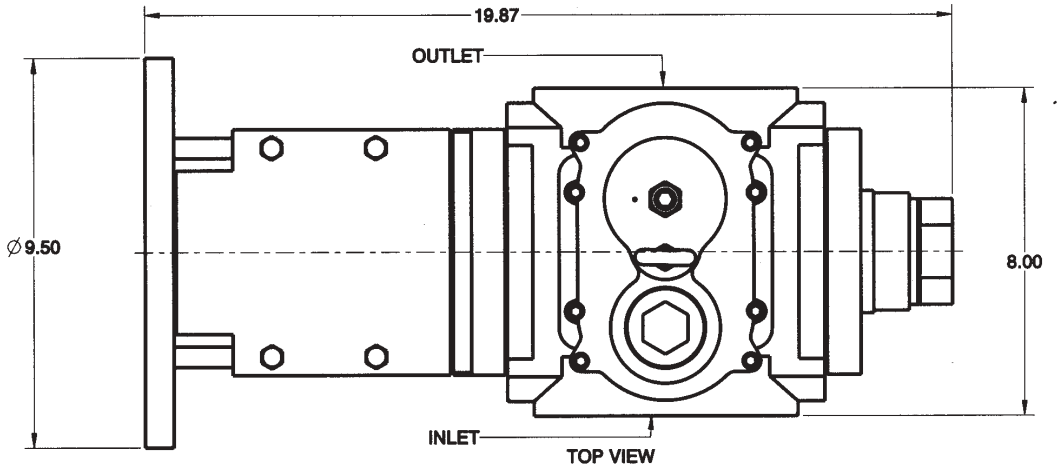

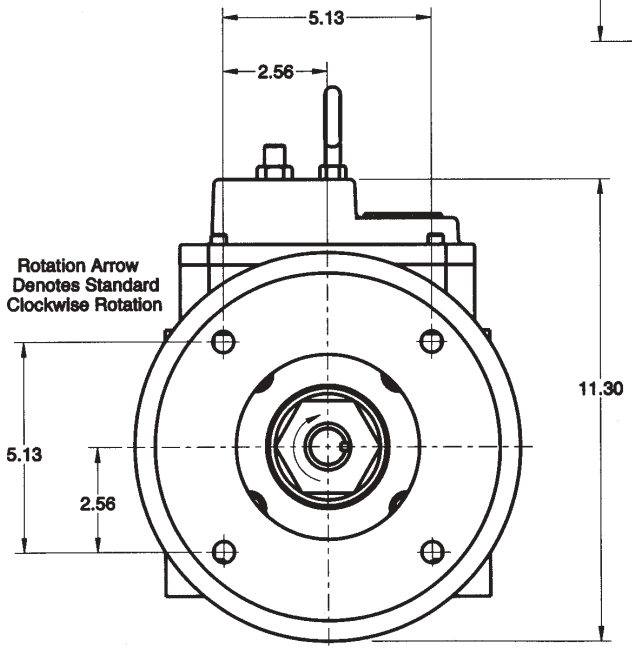

SHAFT END VIEW

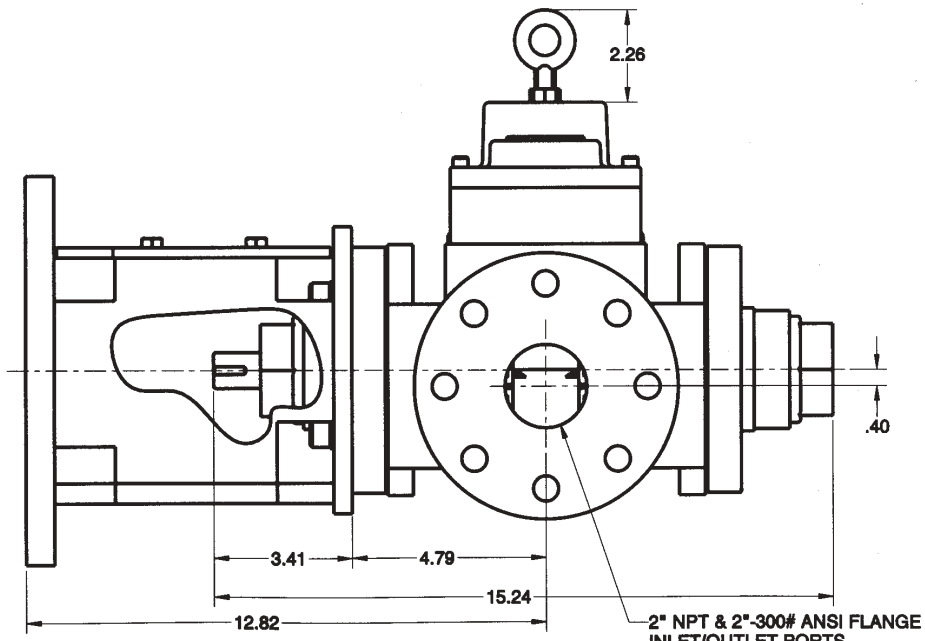

RIGHT SIDE VIEW

Z213D Bracket for Double Pump

(Revised 3-1-03)